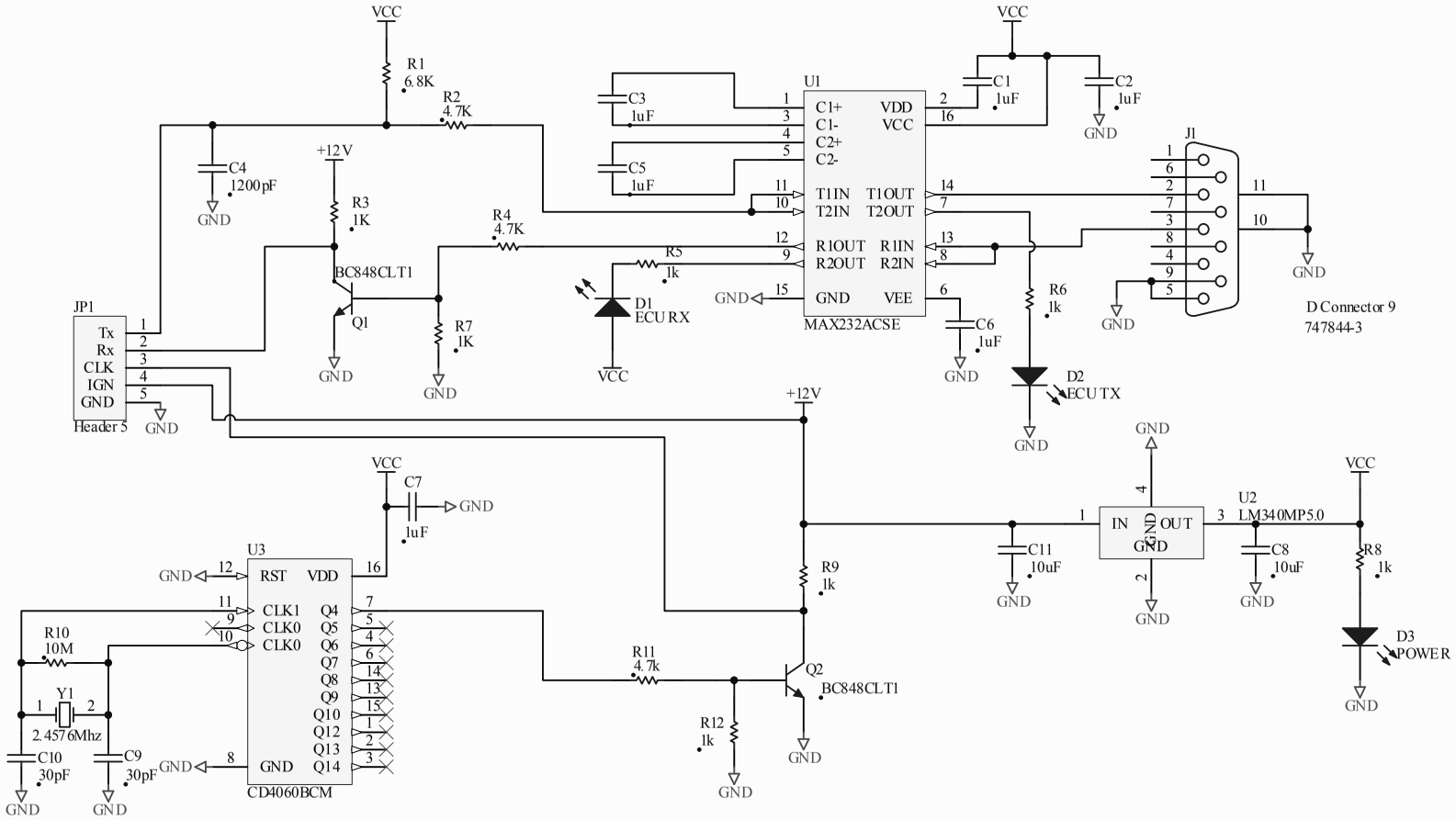

Title Nissan Consult RS232 Interface		
Size Letter	Number	Revision D2
Date: 3/27/2006	Sheet of 1 of 1	
File: C:\Projects\..\Consult_revD2.SchDoc	Drawn By: Jamie Kline	